aion
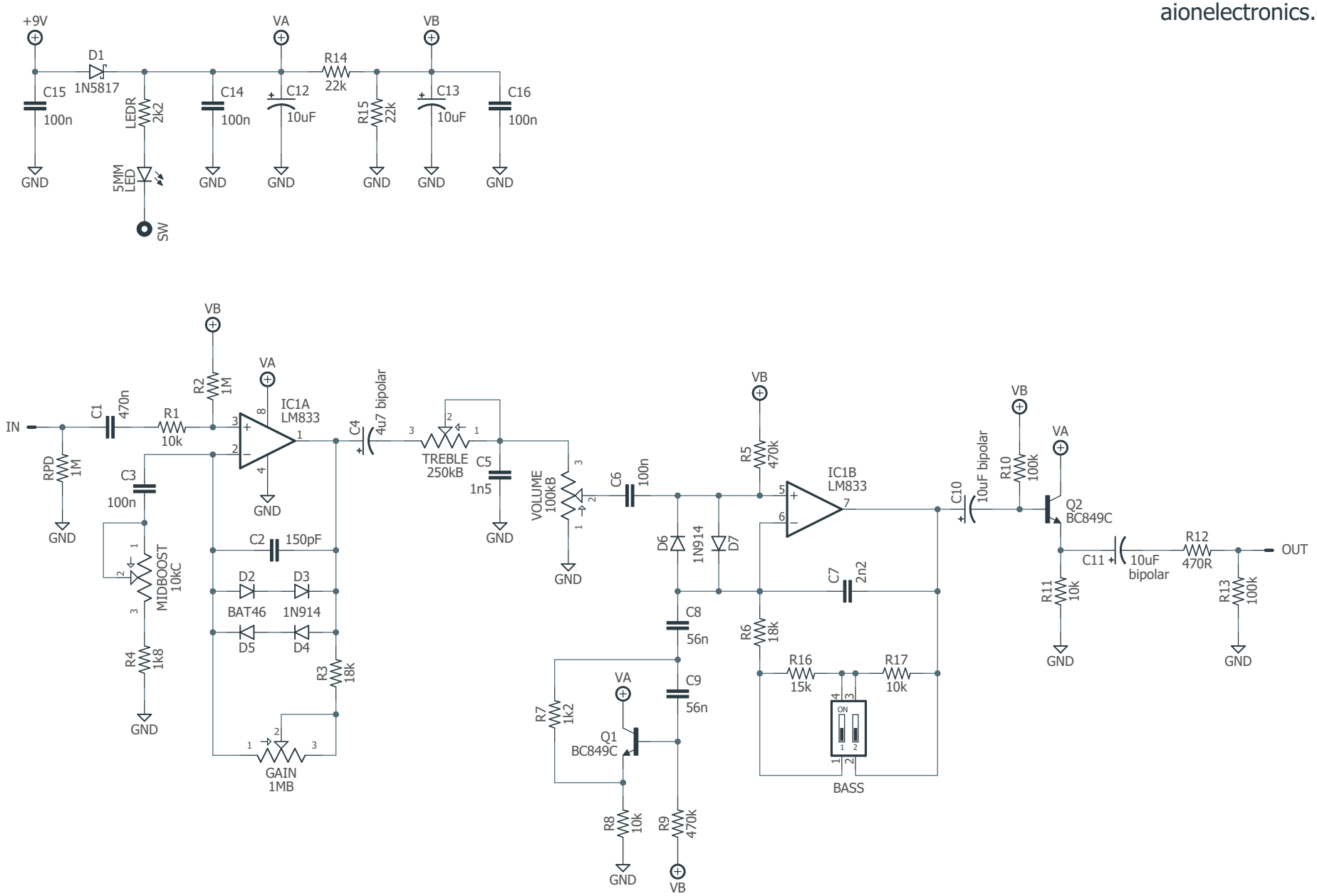
Xotic Soul Driven
v1.1 (10/23/2019)
aionelectronics.com