aion

# Nordland ODR-C Custom Overdrive

Schematic v1.0 (10/22/2021)
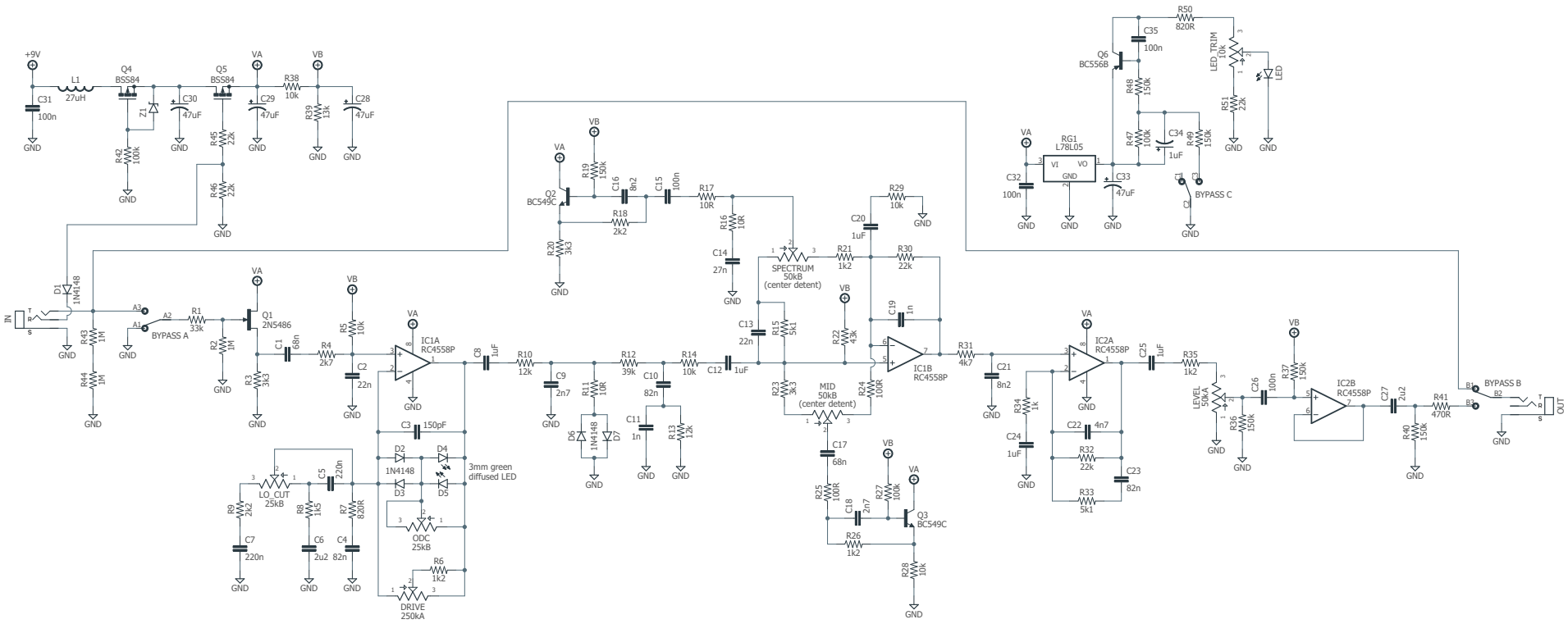
aionfx.com