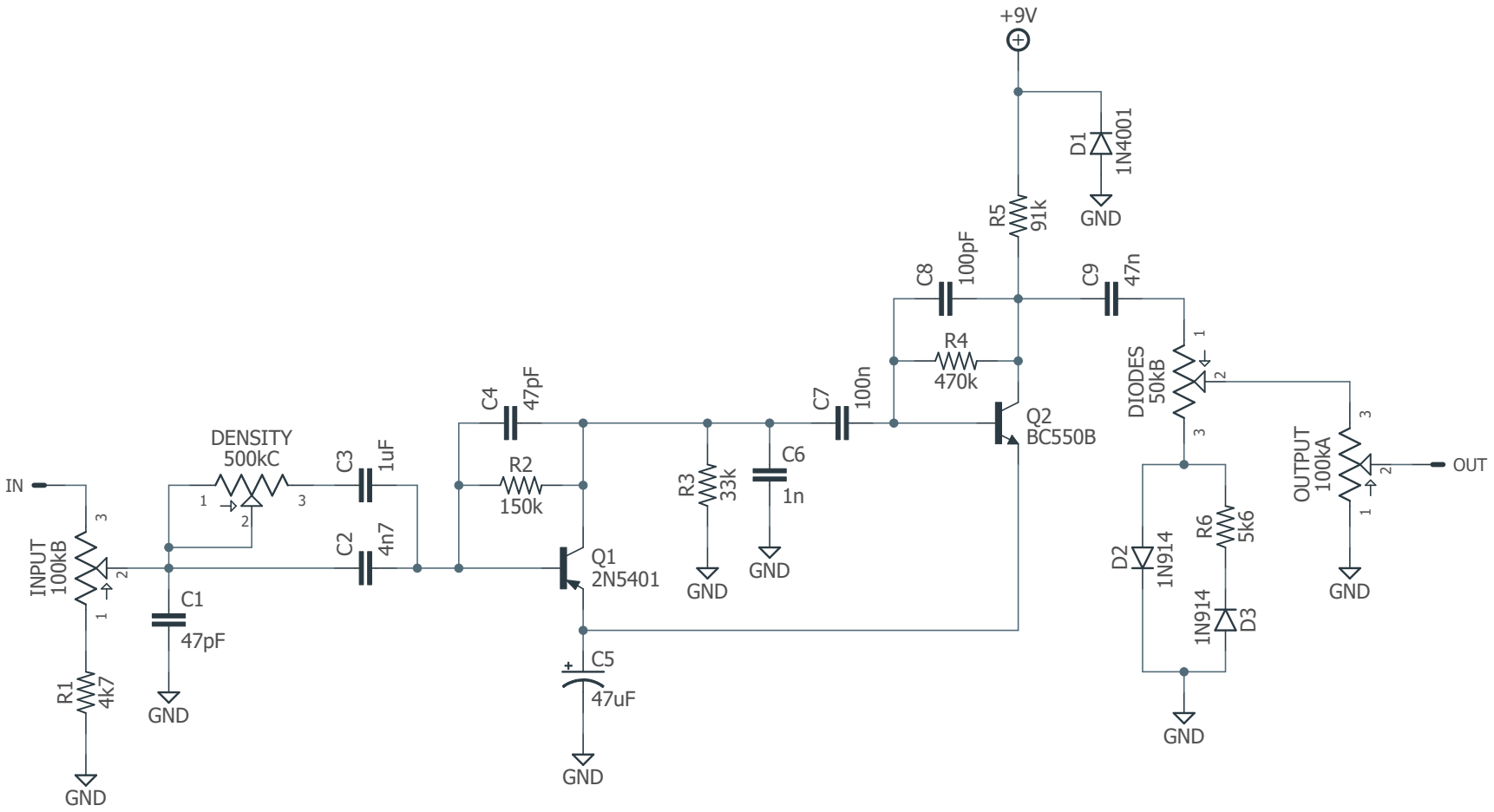Catalinbread Karma Suture
Silicon Version (2016)
Schematic v1.0 (2/19/2021)
aionfx.com