aion

Catalinbread CB30

Schematic v1.0 (5/21/2021)
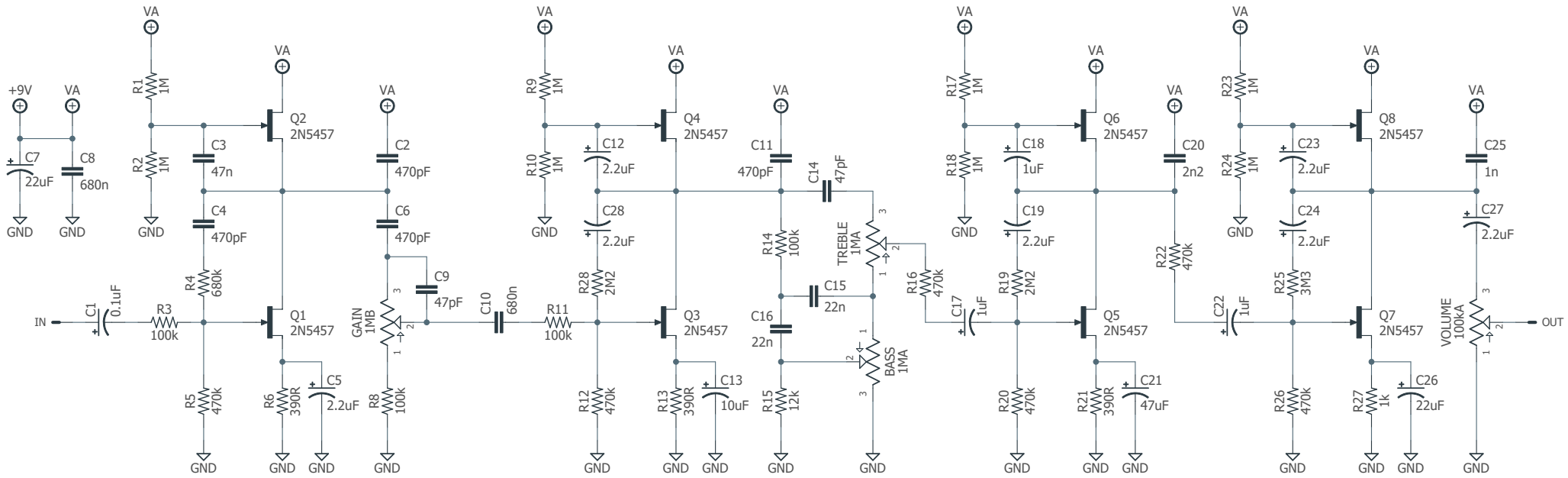
aionfx.com