aion
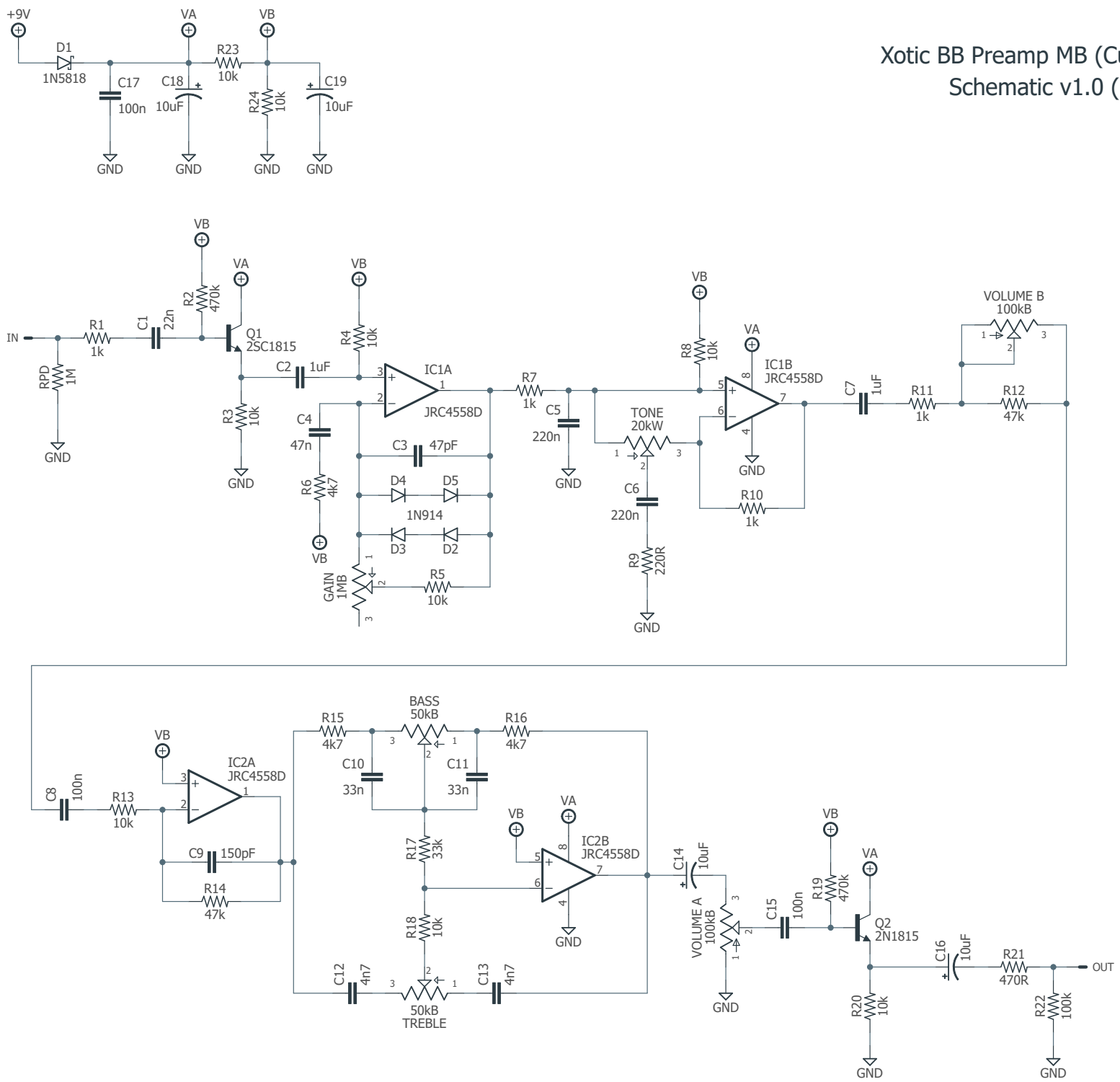
Xotic BB Preamp MB (Custom Shop)
Schematic v1.0 (10/22/2021)
aionfx.com