aion
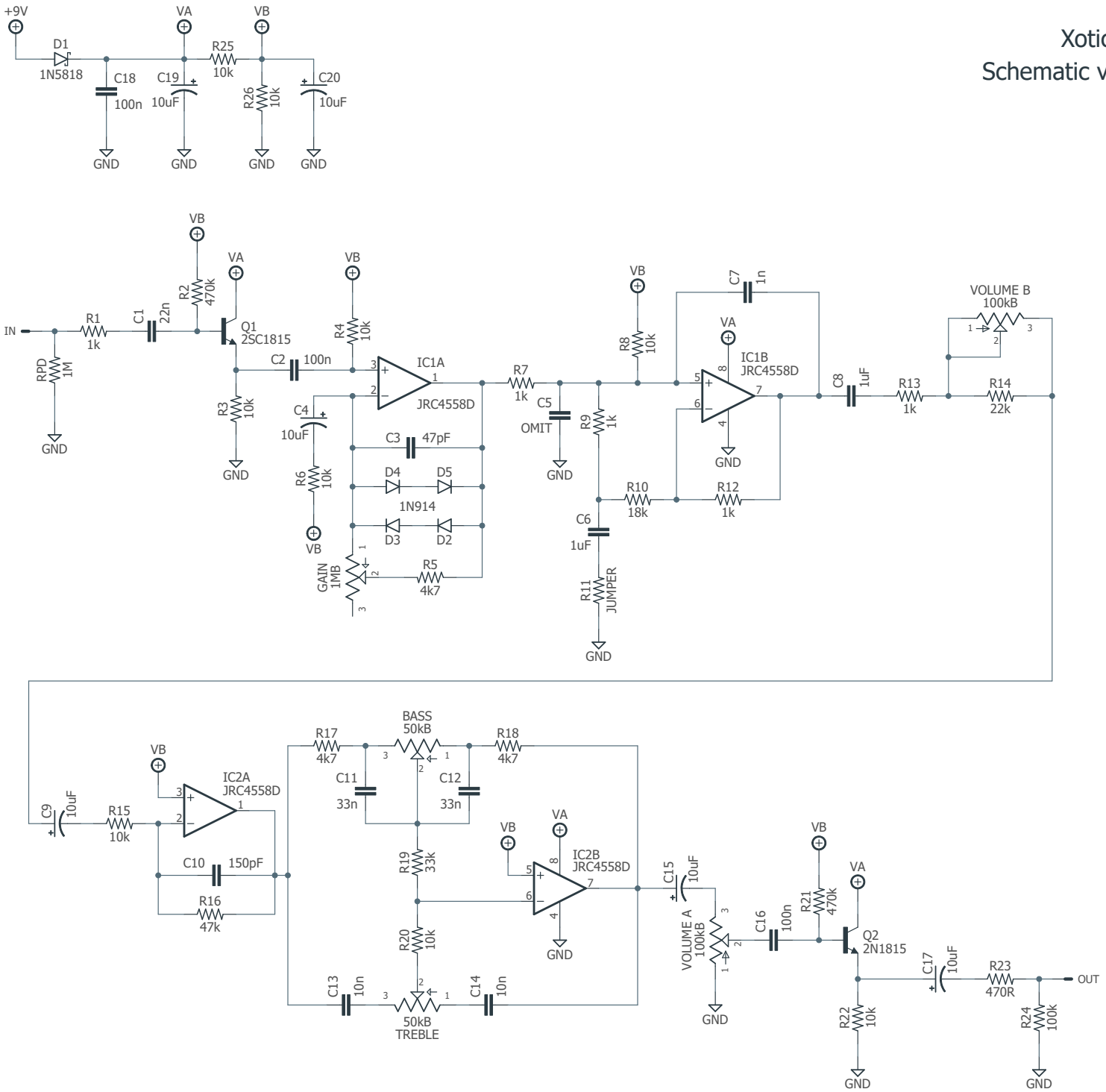
Xotic Bass BB Preamp
Schematic v1.0 (10/22/2021)
aionfx.com